INFORMATION REQUIRED FOR WOOD-BURNING UNIT APPLICATION

(To be completed as fully as possible and attached to the Building Permit Application form)

NOTE: Attach the installation manual for the unit.
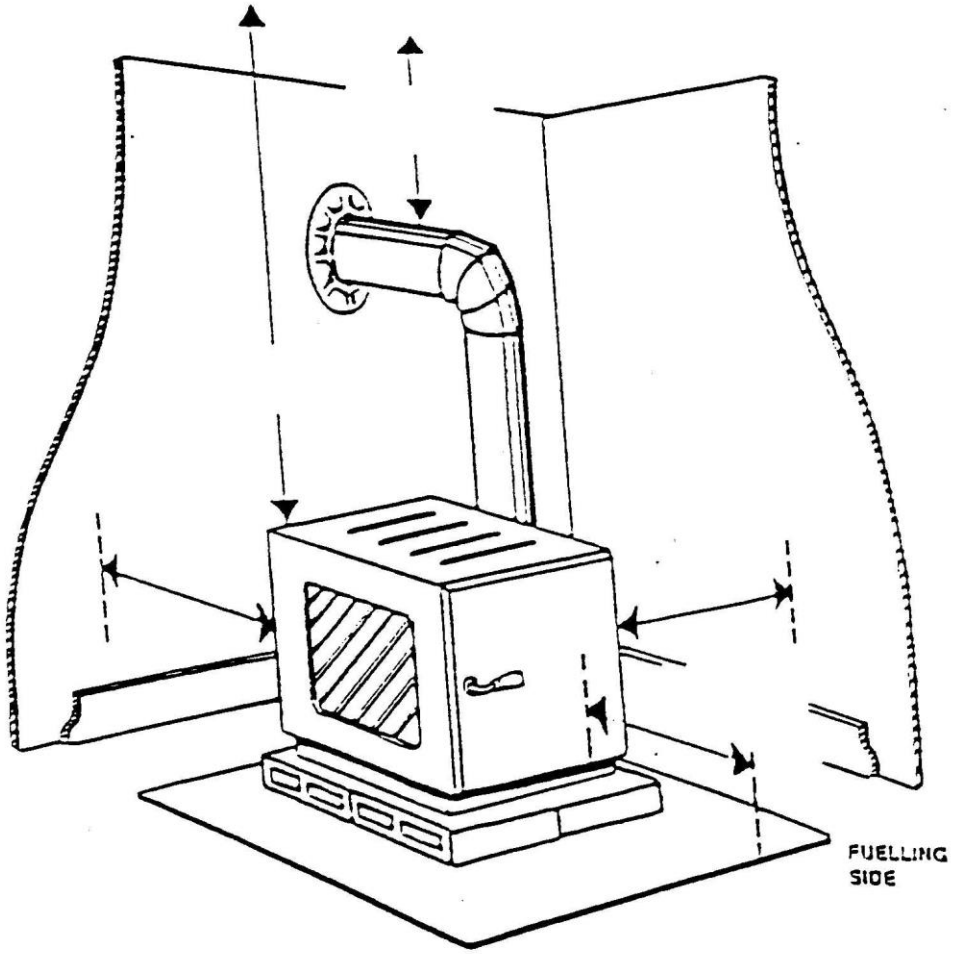
1. Date: _____
2. Permit Number: _____
3. Applicant/Owner: _____
4. Rural or Street Address:_____
5. Legal Land Description: Lot ____ Block _____ Plan _____
   _____¼ Sec _____ Twp _____ Rge _____ W of _____ M
6. Is the solid fuel burning appliance ULC, Warnock Hersey or CSA approved?
   _____
7. Please fill in the information as indicated on the diagram below.
8. Draw a diagram of the wood-burning unit, include the distance from each wall, the distance of the non-combustible floor extends around all sides of the unit, flue type and clearance (example of diagram below).
9. Is the wood-burning unit ULC or Warnock-Hershey approved? Yes / No
   If no, where did you purchase the unit? _____
10. What type of floor is the wood-burning unit on – concrete blocks or tiles? _____